සියලු ම හිමිකම් ඇවිරිණි / முழுப் பதிப்புரிமையுடையது / All Rights Reserved]

ශ්‍රී ලංකා විභාග දෙපාර්තමේන්තුව
இலங்கைப் பரீடசைத் திணைக்களம்
Department of Examinations, Sri Lanka

අධ්‍යයන පොදු සහතික පත්‍ර (උසස් පෙළ) විභාගය, 2016 අගෝස්තු
கல்விப் பொதுத் தராதரப் பத்திர (உயர் தர)ப் பரீடசை, 2016 ஓகஸ்ற்
General Certificate of Education (Adv. Level) Examination, August 2016

තොරතුරු හා සන්නිවේදන තාක්ෂණය I
தகவல், தொடர்பாடல் தொழினுட்பவியல் I
Information & Communication Technology I

20 E I

පැය දෙකයි
இரண்டு மணித்தியாலம்
Two hours

Instructions:

- *Answer **all** the questions.*
- *Write your **Index Number** in the space provided in the answer sheet.*
- *Instructions are also given on the back of the answer sheet. Follow those carefully.*
- *In each of the questions **1** to **50,** pick one of the alternatives from* (1), (2), (3), (4), (5) *which is **correct or most appropriate** and **mark your response on the answer sheet with a cross** (x) **in accordance with the instructions given on the back of the answer sheet.***
- *Use of calculators is **not allowed.***

1. Which of the following statements is true?
(1) The first generation of computers were built using transistors.
(2) Electronic Numerical Integrator And Computer (ENIAC) is a second generation computer.
(3) Ada Lovelace is the inventor of the Analytical Engine.
(4) Alan Turing is considered as the first computer programmer.
(5) The first calculating device is believed to be the Abacus.

2. Which of the followings is a component of a Central Processing Unit (CPU)?
(1) ROM (2) RAM (3) ALU
(4) L3 Cache memory (5) Power supply unit

3. Which of the following binary numbers is equivalent to 109_{10}?
(1) 1100100_2 (2) 1101101_2 (3) 1001101_2 (4) 1101001_2 (5) 1101100_2

4. Consider the following description/definition list, rendered by a web browser:

Zigzag
  Moving with sharp turns.
Back and forth
  Moving side to side.
Round and round
  Moving in a circle.

Which of the following answers contains all the HTML tags required to create the above list?
(1) <dl>, <dt> only (2) <ul>, <li> only (3) <ol>, <li> only
(4) <dl>, <li> only (5) <dl>, <dt>, <dd> only

5. The content stored in ..... is read by using the optical technology.
Which of the following answers is the most appropriate to fill the blank in the above statement?
(1) flash memory (2) floppy disk (3) magnetic tape
(4) compact disc (5) hard disk

6. In modern computers, multiple levels of cache memory is used to optimize the performance. Among them, the ..... cache which is on/in ..... is the fastest and most expensive cache memory.
Which of the following terms are correct to fill the blanks respectively in the above statement?
(1) Level 1 (L1), main memory (2) Level 3 (L3), motherboard
(3) Level 1 (L1), microprocessor (4) Level 2 (L2), microprocessor
(5) Level 3 (L3), microprocessor

7. $101_{16} + 110_8 =$
(1) 429_{10} (2) 1011_{10} (3) 329_{10} (4) 529_{10} (5) 137_{10}

[See page two

8. In an operating system, suspending the currently executing process and then resuming or starting another process is termed as
(1) paging. (2) context switching. (3) swapping.
(4) interrupting. (5) blocking.

9. In modern operating systems, the ..... scheduler determines the transition of processes from the new state to the ready state.
Which of the followings is the correct term to fill the blank in the above statement?
(1) mid-term (2) long-term (3) very long-term
(4) very short-term (5) short-term

10. Consider the following statements:
A - Plagiarism is a common threat to information systems.
B - Plagiarism means claiming someone else's creation as one's own.
C - Piracy is a synonym for plagiarism.
Which of the above statements is/are correct?
(1) A only (2) B only (3) C only (4) A and B only (5) B and C only

11. Consider the following logic circuit implemented using universal gates:

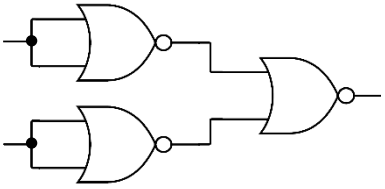

The above circuit is equivalent to a/an
(1) NOT Gate. (2) AND Gate. (3) OR Gate. (4) NAND Gate. (5) NOR Gate.

12. "An analog signal is sampled at regular intervals and represented as 16 bit values."
Which of the followings is best described by the above statement?
(1) Amplitude Modulation (AM) (2) Frequency Modulation (FM)
(3) Pulse Code Modulation (PCM) (4) Phase Modulation (PM)
(5) Pulse Width Modulation (PWM)

13. Two machines with the IP addresses 192.248.16.30 and 192.248.16.90 are connected to a Local Area Network (LAN). Which of the followings is a suitable subnet mask for this network?
(1) 192.255.255.255 (2) 192.248.16.0 (3) 255.255.255.224
(4) 255.255.255.128 (5) 255.255.255.255

14. Which of the followings is true about e-commerce?
(1) It could be a part of e-business.
(2) It helps to combine multiple business processes into a single information system.
(3) It is a collection of platforms created for business and their customers to interact.
(4) www.google.com is a popular e-commerce web site.
(5) There are no Sri Lankan companies doing e-commerce yet.

15. Consider the following statements:
A - HTML forms can be used to submit data.
B - HTML forms can be used to retrieve data.
C - HTML forms can be placed inside another form.
Which of the above statements is/are correct?
(1) A only (2) B only (3) C only (4) A and B only (5) B and C only

16. A/An ..... is an image with clickable sub-areas.
Which of the followings is the most appropriate to fill the blank in the above statement?
(1) Image button (2) Image map (3) Anchor
(4) Icon (5) Thumbnail

17. Which of the following is a valid CSS rule?
(1) p { color: red;} (2) p { color = red;} (3) p { text-color: "red";}
(4) p { text-color = red;} (5) p { text-color: red;}

[*See page three*

18. Which of the following is a correct IPv4 address?
(1) 192.248.0.0.1 (2) 192.258.2.1 (3) 8.8.8.8
(4) 10.256.8.9 (5) 255.255.255.268

19. User Datagram Protocol (UDP) is a ..... layer protocol.
Which of the following layers is the most suitable to fill the blank in the above statement?
(1) physical (2) data link (3) network (4) transport (5) application

20. Consider the following statements regarding routing in IP networks:
A - All routers must use a DNS server for IP packet forwarding.
B - Routers must forward all receiving IP packets along the same path.
C - A router may discard an IP packet.
Which of the above statements is/are correct?
(1) A only (2) B only (3) C only
(4) A and B only (5) B and C only

21. Consider the following system implementation methods:
A - Direct B - Phase C - Parallel
Which of the above methods can be recommended to implement an emergency call handling system?
(1) A only (2) B only (3) C only (4) A and B only (5) A and C only

22. In a public key cryptographic system, the private key of a person x is given by the function priv(x) and the public key is given by the function pub(x).
Consider the following statements:
A - priv(x) and pub(x) should be the same for better security.
B - A message encrypted using pub(x) can be decrypted using pub(x).
C - The person x knows both priv(x) and pub(x).
Which of the above statements is/are correct?
(1) A only (2) C only (3) A and B only
(4) A and C only (5) B and C only

23. Local Area Network (LAN) has 500 network devices. What is the most appropriate subnet mask for this computer network?
(1) 255.255.255.0 (2) 255.255.255.128 (3) 255.255.255.192
(4) 255.255.255.224 (5) 255.255.254.0

24. Consider the following statements about compilers and interpreters used in programming languages:
A - Compilers/interpreters are not required to execute a program written in assembly language.
B - Compilers are not essential to execute a program in machine code.
C - An executable program is translated into a source program by a compiler.
Which of the above statements is/are correct?
(1) A only (2) B only (3) C only
(4) A and B only (5) B and C only

25. A web browser running on a client computer A renders a web page in a web server running on a computer B. Which of the following is **not** a factor that affects the speed of rendering?
(1) Size of images in the web page (2) Number of colours in the web page
(3) Speed of the client computer (4) Efficiency of the web browser software
(5) Number of users in the network

26. Consider the following statements about Dynamic Random Access Memory (DRAM):
A - Periodic refreshing is required for DRAM.
B - Registers in the processor are made of DRAMs.
C - Memory density of DRAM is higher than that of static RAM.
Which of the above statements is/are correct?
(1) A only (2) B only (3) A and B only
(4) A and C only (5) B and C only

27. "Employees of modern organizations perform their duties from home." Which of the followings best describes the above statement?
(1) Social networking (2) Telecommuting (3) Instant messaging
(4) Office automation (5) Blogging

[*See page four*

28. Consider the following statements about flowcharts:

A - A flowchart is a pictorial representation of an algorithm.
B - A flowchart may have more than one 'stop' or 'end' termination symbols.
C - Algorithms can be represented only by using flowcharts.

Which of the above statements is/are correct?

(1) A only (2) B only (3) C only (4) A and B only (5) B and C only

29. The algorithm represented by the following flowchart reads 5 numbers and prints the sum of them.

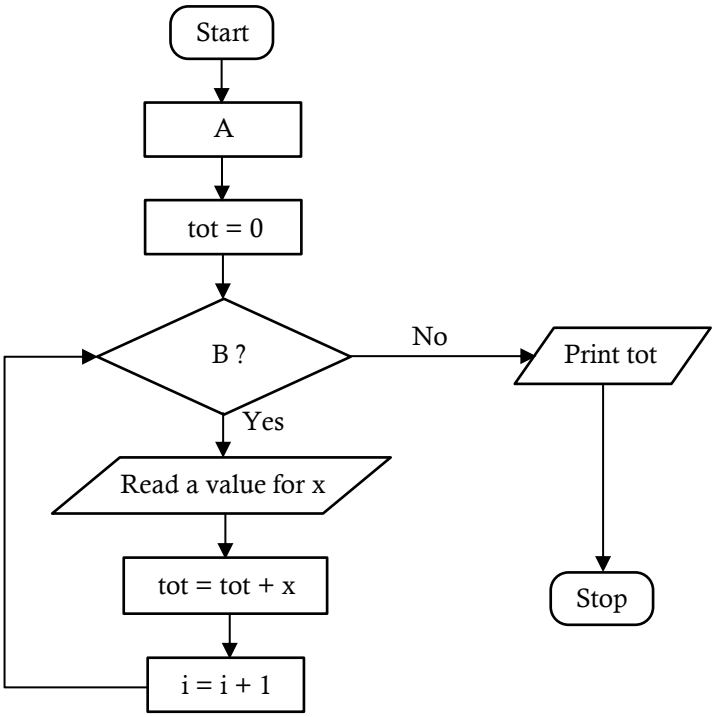

In order to execute the above flowchart correctly, A and B should be replaced by ..... respectively. Which of the followings is suitable to fill the blank in the above statement?

(1) i = 0 and i ≤ 5 (2) i = 1 and i = 5 (3) i = 0 and i > 5
(4) i = 1 and i ≤ 5 (5) i = 1 and i ≥ 5

30. Which of the following Python programs computes the sum of five given integers?

(1)
```
i = 1
tot = 0
while i > 5:
  x = int(input())
  tot = tot + x
  i = i + 1
print(tot)
```

(2)
```
i = 1
tot = 0
while i <= 5:
  x = int(input())
  tot = tot + x
  i = i + 1
print(tot)
```

(3)
```
i = 1
tot = 0
while i == 5:
  x = int(input())
  tot = tot + x
  i = i + 1
print(tot)
```

(4)
```
i = 0
tot = 0
while i > 5:
  x = int(input())
  tot = tot + x
  i = i + 1
print(tot)
```

(5)
```
i = 0
tot = 0
while i <= 5:
  x = int(input())
  tot = tot + x
  i = i + 1
print(tot)
```

[*See page five*

31. Consider the following Python statement:

temp = [23,45,2,-2,0][:2:]

What would be the value of the variable **temp** after executing the above statement?

(1) 23,45 (2) [23,45] (3) 23,2 (4) [23,2] (5) [23,2,0]

32. Which of the following statements is an example for an essential non-functional requirement of an Internet banking system?

(1) System shall facilitate its users to open accounts.
(2) System shall facilitate its users to check account balance.
(3) System shall use a 256-bit encryption for all communications.
(4) System should facilitate its users to order cheque books.
(5) System should be able to render information on all popular web browsers.

33. Which of the following is the most appropriate example for a **manual temporary** data store?

(1) A file tray (2) A cardboard file (3) A file cabinet
(4) A data file in a hard disk (5) A temporary data file in a hard disk

34. Which of the following **high-level** data flow diagrams is correct with respect to the rules on data flow modelling?

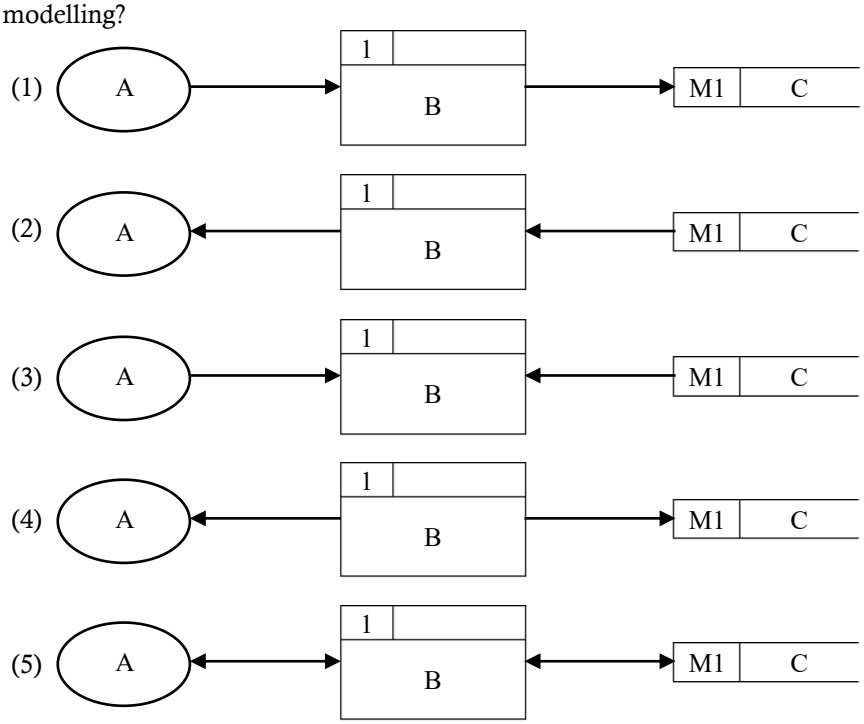

35. Which of the following statements is correct with respect to a scanner?

(1) A scanner is a software which scans a printed document and converts them into digital images.
(2) A scanner is an output device of a computer.
(3) The optical character reader (OCR) software is an essential component of a scanner.
(4) A scanner is an input device of a computer.
(5) Scanners are used to store moving pictures in digital form.

- Consider the following relation to answer questions **36** and **37**:
  book (BN, title, publisher, version, author1, author2, author3)
  where BN is a unique code.

36. Which of the following statements is correct with respect to the above relation?

(1) It is in zero normal form. (2) It is in the 1st normal form.
(3) It is in the 2nd normal form. (4) It is in the 3rd normal form.
(5) Its normal form cannot be decided.

37. Which of the followings can be a candidate key of the above relation?

(1) BN (2) publisher (3) version (4) author1 (5) author2

[*See page six*

38. Which of the followings is correct with respect to the term 'domain' in a relational database?
(1) It is a set of possible names for a table.
(2) It is a set of possible names for an attribute.
(3) It is the collection of all possible primary keys.
(4) It is the set of all possible values of an attribute.
(5) It is the collection of foreign keys.

39. Which of the following Python code segments is syntactically **incorrect**?

(1)
```
if x > 0:
    y = 2
```

(2)
```
if x > 0:
    y = 2
else:
    y = 3
```

(3)
```
if x > 10:
    y = 1
elseif x > 5:
    y = 2
```

(4)
```
if x > 10:
    y = 1
elif x > 5:
    y = 2
else:
    y = 3
```

(5)
```
if x > 10:
    y = 1
else:
    if x > 5:
        y = 2
    else:
        y = 3
```

40. Consider the following Python program segment:
d1 = "(1,2,3)"
d2 = (1,2,3)
d3 = [1,2,(1,2)]
What would be the types of variables dl, d2 and d3 respectively after the execution of the program segment?
(1) tuple, tuple, tuple (2) string, tuple, tuple (3) char, tuple, list
(4) string, tuple, list (5) tuple, tuple, list

41. Which of the following Python statements is syntactically **incorrect**?
(1) a, b = 10, 15 (2) a = b = 1, 2 (3) a = 1, 2
(4) a, b = 2, (3, 5) (5) a, b = 2, 3, 5

42. What will be the value of the variable x, after executing the following Python statement?
$x = 3 - 4 * 6 / 3 + 12 / 4 * 3$
(1) –5.0 (2) –4.0 (3) –1.0 (4) 4.0 (5) 5.0

43. What is the two's complement representation of 89_{10}?
(1) 01111011 (2) 01011001 (3) 10100111 (4) 01001001 (5) 01011101

44. Which of the followings is correct about open systems?
(1) All inputs required for an open system is available within the system itself.
(2) Open systems cannot interact with other systems.
(3) Open systems do not need other systems for its operations.
(4) Humans can make open systems.
(5) All the natural systems are open systems.

45. Which of the followings is **not** an application of artificial intelligence?
(1) Self-learning robots (2) Expert advisory systems for professionals
(3) Smartphones (4) Recommender systems on e-commerce platforms
(5) Handwriting recognition systems

46. Which of the followings is correct with respect to the output of an SQL statement?
(1) It generates an error if no data is available in the tables referred in the SQL statement.
(2) It is always a table.
(3) The order of the attributes in the output should be the same as the order of attributes in the table definition.
(4) Outputs cannot be produced if the primary keys are not defined.
(5) Names of the attributes in the output should be the same as the names in the table definition.

[*See page seven*

47. The length of an attribute defined using a Data Definition Language (DDL) statement is a/an ..... constraint.
Which of the followings is the most appropriate to fill the blank in the above statement?
(1) primary key (2) foreign key (3) null value (4) domain (5) application

48. Consider the following table in a relational database:

student	name	telephone	zscore
S0001	Dananjaya	0711118337	1.8
S0002	Saluka	0712227447	1.9
S0003	Upul	0713333882	2.0
S0004	Priyankara	0714445225	1.9
S0005	Supun	0715556446	2.1

What is the minimum number of SQL statements required to update all the values of the attribute zscore in the above table to 2.1?
(1) 1 (2) 2 (3) 3 (4) 4 (5) 5

49. Consider the following statements:
A - Software Agents are computer programs.
B - Some computer viruses could be considered as software agents.
C - All software agents have user interfaces.
Which of the above statements is/are correct?
(1) A only (2) A and B only (3) A and C only
(4) B and C only (5) All A, B and C

50. Which of the following Python functions is syntactically **incorrect**?

(1)
```
def fun(x,y):
    return x
```

(2)
```
def fun():
    return 5
```

(3)
```
def fun(x,y):
    pass
```

(4)
```
def fun:
    return 5
```

(5)
```
def fun(x,y=5):
    return y,x
```

❋ ❋ ❋

සියලු ම හිමිකම් ඇවිරිණි / முழுப் பதிப்புரிமையுடையது / All Rights Reserved]

ශ්‍රී ලංකා විභාග දෙපාර්තමේන්තුව
இலங்கைப் பரீடசைத் திணைக்களம்
Department of Examinations, Sri Lanka

අධ්‍යයන පොදු සහතික පත්‍ර (උසස් පෙළ) විභාගය, 2016 අගෝස්තු
கல்விப் பொதுத் தராதரப் பத்திர (உயர் தர)ப் பரீடசை, 2016 ஓகஸ்ற்
General Certificate of Education (Adv. Level) Examination, August 2016

තොරතුරු හා සන්නිවේදන තාක්ෂණය II
தகவல், தொடர்பாடல் தொழினுட்பவியல் II
Information & Communication Technology II

20 E II

පැය තුනයි
மூன்று மணித்தியாலம்
Three hours

Index No. : …….....

Important:

- *This question paper consists of* **06** *pages.*
- *This question paper comprises of two parts,* **Part A** *and* **Part B.** *The time allotted for* ***both parts*** *is* ***three hours.***
- *Use of calculators is* ***not allowed***

PART A – Structured Essay:
(pages 2-4)

- *Answer* ***all*** *the questions* ***on this paper itself.*** *Write your answers in the space provided for each question. Note that the space provided is sufficient for your answers and that extensive answers are not expected.*

PART B – Essay:
(pages 5-6)

- *This part consists* ***six*** *questions, of which,* ***four*** *are to be answered. Use the papers supplied for this purpose.*
- *At the end of the time allotted for this paper, tie the* ***two parts together*** *so that* **Part A** *is* ***on top*** *of* **Part B** *before handing them over to the Supervisor.*
- *You are permitted to remove* ***only*** **Part B** *of the question paper from the Examination Hall.*

For Examiner's Use Only

For the Second Paper		
Part	**Question No.**	**Marks**
A	1	
	2	
	3	
	4	
B	1	
	2	
	3	
	4	
	5	
	6	
Total		

Final Marks

In numbers	
In words	

Code Number

Marking Examiner 1	
Marking Examiner 2	
Marks checked by :	
Supervised by :	

[See page two

Do not write in this column

Part A – Structured Essay

*Answer **all four** questions on this **paper itself***

1. (a) State the Operation of each HTML code segments given below. Assume that all images and HTML documents are in the same folder.

(i) `<a href="coverPage.jpg" target = "_blank">Cover Page</a>`

.....

.....

.....

(ii) `<a href="content.html">Content</a>`

.....

.....

(iii) `<a href="figures.html" target = "_self"> <img src = "figures.jpg"/></a>`

.....

.....

.....

(b) Which of the three mechanisms used to apply styles to HTML elements increases the maintainability of a web site?

.....

(c) Consider the following HTML code segment:

```
<body>
   <h2>How web search engines work</h2>
   <p>A search engine maintains three processes.
   </p>
</body>
```

Write the internal styles required to apply the following styles for the elements in the above code segment.

Element	Property	Style
h2	Colour	Red
	Text	Centre aligned
P	Font	Courier New, 14 points high

.....

.....

.....

.....

.....

.....

.....

.....

[*See page three*

Do not write in this column

2. Assume that the camera you have been using so far is no longer needed since you have received a latest camera as a gift. A friend suggested that your old camera could be sold on the Internet. Consequently, you were able to sell the camera to a buyer in an African country, through a web site. You received the payment made by the buyer through a service like Paypal.

(a) State an example for each C2C and B2C e-commerce types with respect to the above transaction.

C2C: .....

.....

.....

B2C: .....

.....

.....

(b) Why is a service like Paypal necessary for this type of transactions?

.....

.....

.....

.....

(c) Some Internet users are reluctant to buy goods online from individual sellers. State **two** reasons for this reluctance and give an example for each.

(1) .....

.....

.....

(2) .....

.....

.....

3. (a) A space station generates oxygen required for its astronauts by 'splitting' water (H_2O) into Hydrogen (H_2) and Oxygen (O_2) using electricity supplied by batteries in the space station. This process is given by the following equation.

Water → Hydrogen + Oxygen ($2H_2O \rightarrow 2H_2 + O_2$)

Carbondioxide (CO_2) breathed out by astronauts and Hydrogen (H_2) generated from the above process are combined together to generate Water and Methane, as given by the following equation.

Hydrogen + Carbondioxide → Water + Methane ($4H_2 + CO_2 \rightarrow 2H_2O + CH_4$)

Generated Methane is removed by charcoal filters.

State whether the system described above is open or closed. Give **two** reasons for your answer.

.....

(1) .....

.....

(2) .....

.....

(b) State **two** possible problems faced by an information system having a relational database in zero normal form.

(1) .....

.....

.....

(2) .....

.....

.....

[*See page four*

Do not write in this column

(c) Assuming that the human brain is a system, compare and contrast a human brain and a computer based information system.

.....

.....

.....

.....

.....

.....

4. (a) Consider the following Python program:

```
#Print the sum of integers from 1 to 5 (including 1 and 5)
total = 0
i = 1
while (i <= 5):
         total = total + i

i = i + 1
print (total)
```

(i) What would be the output of the above program when executed? Justify your answer.

.....

.....

.....

.....

.....

(ii) Modify and rewrite the above program, **without increasing** the number of statements, to compute the sum of integers from 1 to 10 (including 1 and 10).

.....

.....

.....

.....

.....

.....

.....

.....

(b) An embedded system uses 16-bit wide address bus to access its byte addressable main memory. What is the maximum usable size of its main memory? Show your computations clearly.

.....

.....

.....

.....

.....

.....

* *

[*See page five*

සියලු ම හිමිකම් ඇවිරිණි / முழுப் பதிப்புரிமையுடையது / All Rights Reserved]

ශ්‍රී ලංකා විභාග දෙපාර්තමේන්තුව
இலங்கைப் பரீடசைத் திணைக்களம்
Department of Examinations,Sri Lanka

අධ්‍යයන පොදු සහතික පත්‍ර (උසස් පෙළ) විභාගය, 2016 අගෝස්තු
கல்விப் பொதுத் தராதரப் பத்திர (உயர் தர)ப் பரீடசை, 2016 ஓகஸ்ற்
General Certificate of Education (Adv. Level) Examination, August 2016

තොරතුරු හා සන්නිවේදන තාක්ෂණය II
தகவல், தொடர்பாடல் தொழினுட்பவியல் II
Information & Communication Technology II

20 E II

Part B

❋ *Answer any **four** questions only.*

1. The top secret recipe for making milk rice at the restaurant chain SLFC is kept in an electronic safe at their head office. The lock (L) of the safe can either be in locked or unlocked states represented by logical truth values 0 and 1 respectively. This lock has three different key holes K1, K2 and K3 each with a unique key. These three keys are in the custody of three directors of SLFC. The lock opens when **at least two keys** are inserted into the corresponding key holes. The situation where the corresponding key is properly inserted into any key hole is represented by the logical truth value 1 and all the other situations are represented by the logical truth value 0.

Assuming that only the following Integrated Circuits (ICs) are available, construct a logic circuit to operate the lock (L) of the safe, by using the truth tables and Boolean algebra. Clearly show the truth tables, Boolean expressions and the Boolean algebraic rules used to construct your circuit.

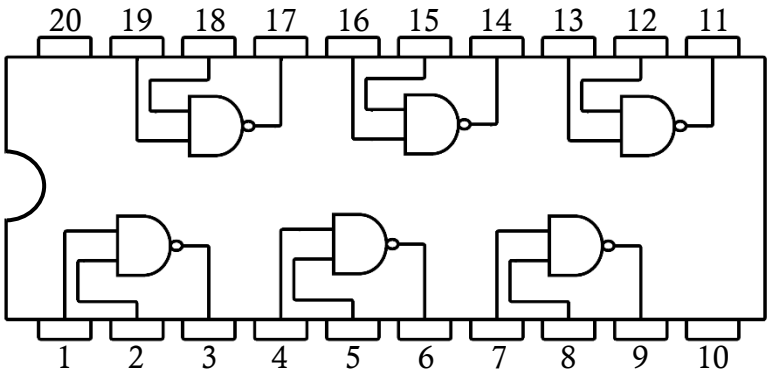

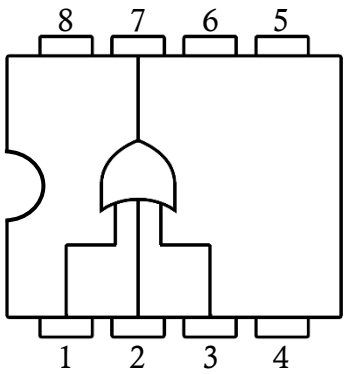

2. There are two Local Area Networks (LANs) L1 and L2 which are connected only by a router R. These LANs are not connected to any other networks. Machines P and Q are connected to LANs L1 and L2 respectively. The machine P has successfully delivered an IP packet IP1 to machine Q.

In a LAN, an IP packet is sent from the source device to the destination device by inserting it into a frame, generated in the data link layer at the source device. In that LAN, source and destination devices are uniquely identified by the MAC addresses in that frame.

An IP address is recognized by the network layer but it is not recognized by the data link layer.

(a) Draw a network diagram to depict the network described above using commonly used symbols and notations.

(b) State whether the destination IP address of the packet IP1 is the IP address of Q or R when it is going through LAN L1. Justify your answer.

(c) Assume that the IP packet IP1 was in a frame F2 in LAN L2. State whether the source MAC address of frame F2 is the MAC address of P or R. Justify your answer.

[See page six

3. The management of the Siri Lak bank has decided to develop a web portal to deliver personalized services to its employees. The services include, access banking plans, regulations and policies, register for learning opportunities provided by the bank, quick search, weather reports, communicate with other employees and leave and loan related services. According to the chief information officer of the bank, the primary goal of developing the portal is to enable its employees to manage their personal lives more easily.

(a) What is the e-commerce type of the services provided by the above web portal? Justify your answer.

(b) State **two** potential benefits obtainable to the employees from the above portal.

(c) The management of the bank expects that they could get a better service from their employees after implementing the proposed portal. Do you agree with this idea? Justify your answer.

(d) A consultant suggests to implement a 'personal user assistant agent' based on the intelligent agent technology to improve the services of the above web portal. State **three** possible ways to improve the services of the above web portal by such an agent.

4. A canteen of a school sells 10 different types of foods. These food types are placed in a shelf. Students can select foods while walking alongside the shelf and keep them on a tray. These trays are available at the entrance of the canteen. A student, after selecting the food, should proceed to the cashier with the food tray for the payment.

You are asked to develop a computer program to calculate the payment due for a food tray. For this purpose, each food type is given a unique integer from 1 to 10.

The integer value assigned for each food type and its unit price is shown in the following table.

Food type	1	2	3	4	5	6	7	8	9	10
Unit price (Rs)	10.00	12.00	15.00	10.00	25.00	45.00	50.00	25.00	10.00	12.00

(a) State all the inputs required for the computer program and its expected output.

(b) Draw a flowchart to represent the algorithm required to compute the payment due for a food tray.

(c) Transform the above flowchart into a Python program.

5. An education institute maintains a timetable to manage its lectures, practical classes and seminars. The timetable consists of two hour time periods: 8.00 a.m. - 10.00 a.m., 10.00 a.m. - 12.00 noon, 1.00 p.m. - 3.00 p.m. and 3.00 p.m. - 5.00 p.m. Lectures, practical classes and seminars are assigned to one or more time periods. A lecture is assigned to a lecturer and a practical class is conducted by a group of demonstrators. At least two lecturers are responsible for a seminar.

Draw an Entity Relationship (ER) diagram for the above system. State all your assumptions clearly.

6. Draw a context diagram to show the operations of the online assignment management system described below adhering to the standards of the Structured System Analysis and Design Methodology (SSADM). Clearly indicate external entities and data flows of your diagram. State any assumptions that you have made.

The National University of ICT (NUICT) conducts distance learning programs. The students of NUICT are continuously assessed through online assignments. The students of NUICT use an online assignment management system called NetAssign to download assignments and upload answer scripts. The examiners use NetAssign to upload assignments and to download answer scripts. Once the answer scripts are marked, the examiners enter marks into NetAssign. The students can view only the grades determined by NetAssign. To use NetAssign, both examiners and students must provide authentication details to the system. These authentication details are provided by NUICT to its students and examiners.

* * *